A Donaldson Company

A WORLD LEADER IN FUME EXTRACTION TECHNOLOGY

PrintPRO 400 DS

PRINTING

Last Updated on 02.02.2022

Mid to high-end fume extraction system for dye-sublimation printers.

The PrintPRO 400 DS is BOFA's mid-range of fume extraction and filtration system. The PrintPRO 400 DS has been purposely designed to filter fumes generated from dye-sublimation printers. This extraction system combines extremely large filter capacity with high airflows and pressure. This combination makes it ideal for heavy-duty applications. This system benefits from automatic flow control, which enables the end-user to set the required airflow for the application. The unit will then maintain this airflow throughout the life cycle of the filters.

The additional feature of BOFA's 'easi-glide' filter location mechanism makes filter change easy, quick and safe. A truly state of the art fume purification solution.

Technology

- HEPA filter
- Automatic flow control (AFC) technology
- Reverse flow air (RFA) technology
- Advanced carbon filter (ACF) technology
- ProTECT service plan
- SureCHECK quality standard

Key features of the PrintPRO 400 DS

Hydrophobic HEPA filters
Standard

Filters with long life and low replacement cost
Standard

Automatic fluid drain
Standard

VOC gas sensor (Volatile Organic Compound)
Optional

Filter change / system fail signal
Optional

Turbines with high airflow and pressure
Standard

Automatic flow control system
Standard

Fluid collection tray
Standard

Remote stop / start interface
Optional

Technical specification

1. Unit / filter condition display - automatic flow control
2. On / off isolator switch
3. Signal / interface cable
4. Power cable
5. Castors
6. Door hinge
7. Hose inlet connections - 125mm
8. Exhaust outlet

Contact BOFA at **https://bofainternational.com/en/contact/**

https://bofainternational.com/en/portal/datasheets/printpro-400-ds/

Approvals: REACH and RoHS. See individual product technical data for specific accreditations

9. Motor cooling inlet

10. Door latch

11. Removable fluid collection tray

12. Automatic drain

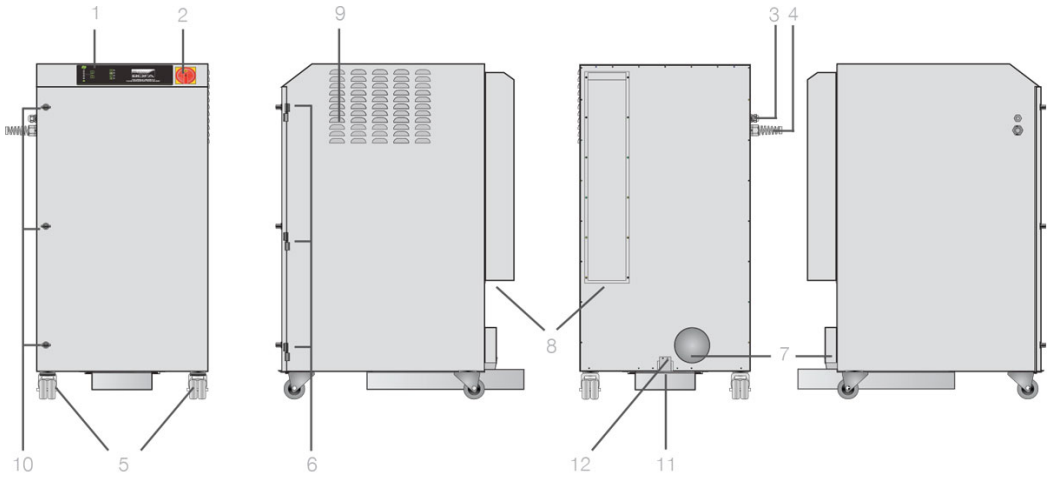

Airflow through filters

- Chemical filter
- HEPA filter
- Sponge filter
- Clean air
- Contaminated air
- Particulate

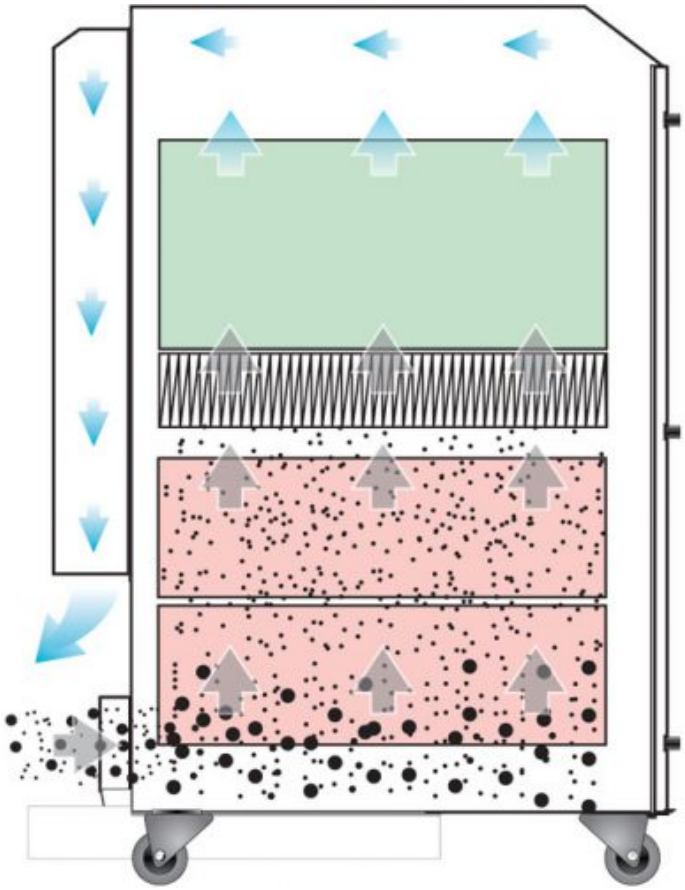

Technical data

	230V	115V
Dimensions (HxWxD)	1170 x 600 x 713mm	46.07 x 23.63 x 28.07”
Cabinet construction	Stainless steel	Stainless steel
Airflow / pressure	380m³/hr / 96mbar	224cfm / 96mbar
Electrical data	100-240v Single-phase 1~ 50/60Hz Full load current: 12.5 amps / 1.1kw	100-240v Single-phase 1~ 50/60Hz Full load current: 12.5 amps / 1.1kw
Noise level	< 65dBA (at typical operating speed)	< 65dBA (at typical operating speed)

Technical data

Weight	155kg	341lbs
Approvals	UKCA and CE	UKCA and CE

HEPA filter specifications

Surface media area	7.5m² approx (80.7 ft²)
HEPA filter media	Hydrophobic borosilicate
HEPA media construction	Maxi pleat construction with glue bead spacers
Filter housing	Zintec mild steel
Filter efficiency	99.997% @ 0.3 microns

Sponge coalescent filter (x2) specifications

Foam media	58 grade open cell foam
Dimensions	600 x 500 x 150 (x2)

Gas filter specifications

Filter housing	Zintec mild steel
Treated activated carbon	30kgs (66 lbs)

Unit part numbers

Model	Voltage	Part no.
PrintPRO 400 DS **Stainless steel**	115V - 230V	L3642A

Options

24V stop / start	Filter change / system failure signal	VOC monitoring
A2001	A2002	A2003

Replacement filter part numbers

Model	Sponge filter (x2)	Gas filter	HEPA filter
PrintPRO 400 DS	A1030245	A1030246	A1030243

Datasheet correct at time of publishing.

Where applicable, the carbon used in BOFA units is capable of removing a wide range of VOCs, however it is the responsibility of the user to ensure the carbon is suitable for their application. For specific applications, please contact us for details.

Important Notice: *Many factors beyond the control of BOFA can affect the use and performance of BOFA products in a particular application, including the conditions under which the product is used. Since these factors are uniquely within the user's knowledge and control, it is essential the user evaluate the products to determine whether the product is fit for the particular purpose and suitable for the user's application. All products, product specifications, availability and data are subject to change without notice, and may vary by region or country.*

Think before you print! Please consider the environment before printing this document.